Centre for Energy and Environmental Markets

UNSW

Network models for nodal pricing

www.ceem.unsw.edu.au

Centre for Energy and Environmental Markets

UNSW

Outline

- Alternative models of AC networks & their application in nodal electricity spot markets:
  - Transport model, DC loadlfow, AC loadflow
- Illustrative three & five node exmples
- Five node network for AC loadflow studies
- AC loadflow results for five node network:
  - With nodal voltage constraints
  - With nodal voltage preference bids & offers
- Discussion & conclusions

Network pricing for nodal pricing © CEEM 2007 2

Centre for Energy and Environmental Markets

UNSW

Alternative models of AC networks for electricity spot markets

- Transport model
  - Models real power but ignores reactive power
  - Models series losses & flow constraints
  - Assumes independent flow on each element:
    - Can be used for the near-radial NEM but not meshed networks
- DC load flow model:
  - Models real power but ignores reactive power
  - Models series losses & flow constraints
  - Models flow sharing between parallel elements

Network pricing for nodal pricing © CEEM 2007 3

Centre for Energy and Environmental Markets

UNSW

Alternative models of AC networks for electricity spot markets

- AC loadflow model
  - Models real & reactive power & nodal voltages
  - Accurate representation of network elements:
    - Series & shunt losses & reactive power
    - Thermal limits
    - Can model transformer tap-changers & reactive power resources
  - Extensive data requirements:
    - Network impedance data
    - Reactive power resources & voltage limits

Network pricing for nodal pricing © CEEM 2007 4

Centre for Energy and Environmental Markets

UNSW

Comparison of alternative models for AC networks

- Transport model (very abstract):
  - Judgement-determined parameters & constraints
  - Used in NEM to model "notional interconnectors"
- DC loadflow model (quite abstract):
  - Assumes voltage control is an ancillary service that can be de-coupled from network power flow
- AC loadflow model (least abstract):
  - Reactive power prices derived from node-voltage limits
  - Bids & offers can include voltage-value functions

Centre for Energy and Environmental Markets

UNSW

Meshed networks

- A meshed network contains at least one loop:
  - At least two network elements operate in parallel
- Flows in parallel network elements are inversely proportional to element impedances
  - Voltage drops across parallel elements are equal
- Impedance = reactance if no network losses:
  - Element resistances are then all zero
- Flow constraints can propagate through the network

Centre for Energy and Environmental Markets

UNSW

Nodal spot markets: 3-node network, DC loadflow
No network flow constraints or losses

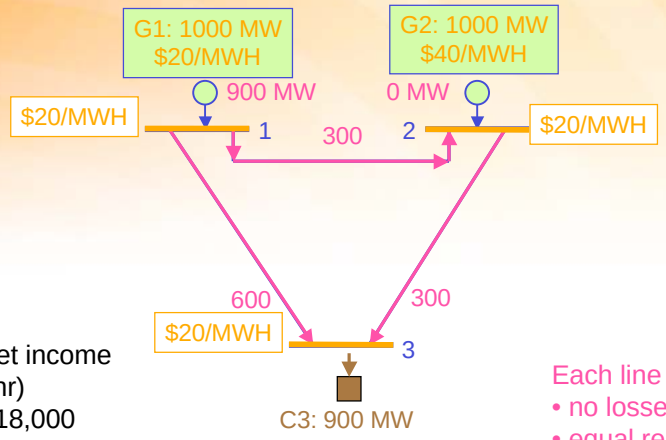

Spot market income ($/hr)
- G1: +18,000
- G2: 0
- C3: -18,000

Each line has:
- no losses
- equal reactance
- no flow constraints

Centre for Energy and Environmental Markets

UNSW

Nodal spot markets: 3-node network, DC loadflow
One constrained link

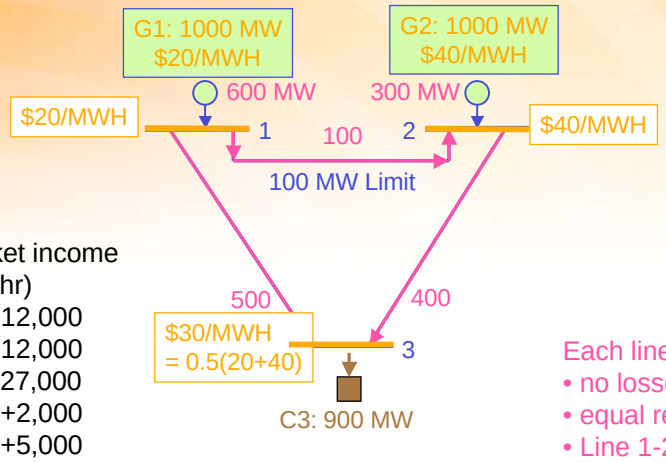

Spot market income ($/hr)
- G1: +12,000
- G2: +12,000
- C3: -27,000
- L12: +2,000
- L13: +5,000
- L23: -4,000

Each line has:
- no losses
- equal reactance
- Line 1-2 has 100 MW flow limit

Centre for Energy and Environmental Markets

UNSW

Nodal spot markets: 3-node network, DC loadflow
Constrained link disconnected

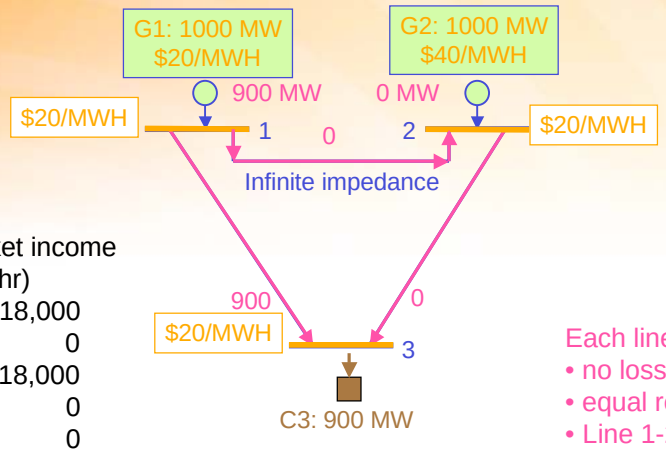

Spot market income ($/hr)

- G1: +18,000
- G2: 0
- C3: -18,000
- L12: 0
- L13: 0
- L23: 0

Each line has:
- no losses
- equal reactance
- Line 1-2 has been disconnected

Centre for Energy and Environmental Markets

UNSW

Nodal spot markets: 3-node network, DC loadflow
Implications

- Meshed network elements are mutually dependent:
  - Unless they can be independently controlled
  - Switching 'weak' elements off may even improve economic outcome (unlike radial network)
- Spot market alone gives perverse incentives:
  - Network earns more when flows are constrained
  - Some generators may benefit from constrained network operation
- DC-loadflow model doesn't incorporate voltage-related issues

Centre for Energy and Environmental Markets

UNSW

Five node example

(no line losses, DC load flow, after PJM example)

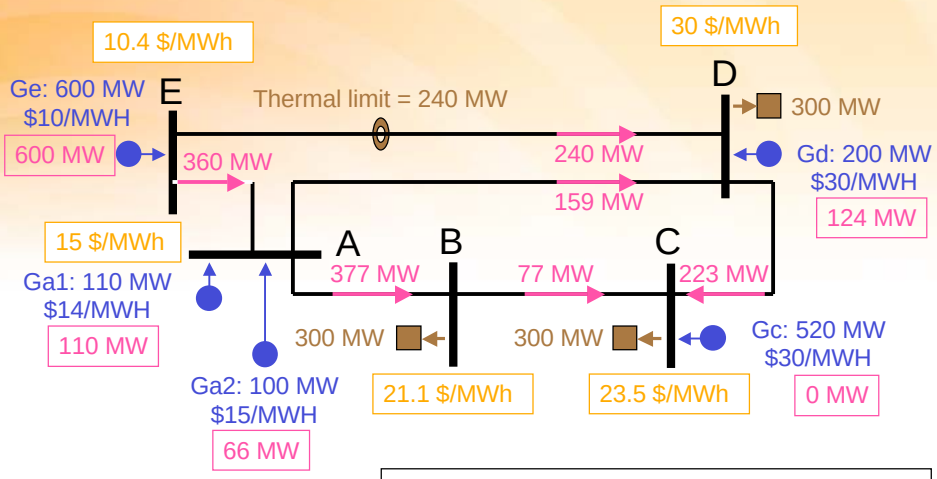

total dispatched generation = 900 MW = total load

Centre for Energy and Environmental Markets

UNSW

Lessons from 5 node DC loadflow example

- Nodal prices for a 5 node network with a single line constraint can be computed:
  - Two marginal generators set local prices & remaining nodal prices derived from these:
    - Requires an accurate network model, including impedances & flow constraints
- Low price at Node E ($10.4 /MWh) because a 1 MW load incr. at Node E would be met by:
  - Increasing the output of Ga2 >1MW @ $15/MWh
  - Reducing the output of Gd <1MW @ $30/MWh
  - To give a net cost of $10.4 /MWh
- DC loadflow doesn't address voltage issues

Centre for Energy and Environmental Markets

UNSW

Five-node network for illustrative studies of nodal pricing using AC loadflow model (Pamudji, UNSW, 1995)

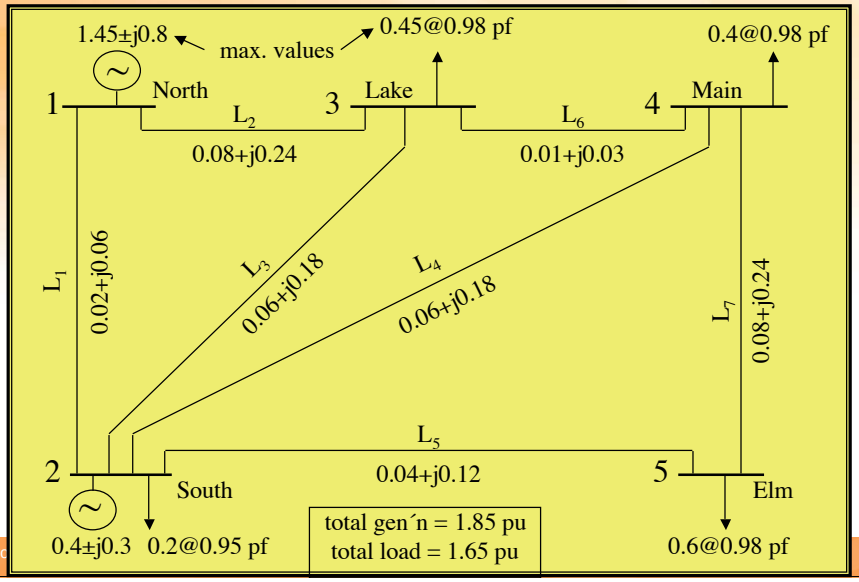

Centre for Energy and Environmental Markets

UNSW

Bid & offer data for 5 node model assuming preference-revealing behaviour (data sets A & B) (Pamudji, UNSW, 1995)

Bids (Loads)

Block	Node	Power (per unit)	Price (c/kWh)	Pf
Sb2	South	0.2	6	0.95
Lb1	Lake	0.3	7	0.98
Lb2	Lake	0.15	6	0.98
Mb1	Main	0.25	8	0.98
Mb2	Main	0.15	7	0.98
Eb1	Elm	0.4	9	0.98
Eb2	Elm	0.2	8	0.98

Total gen = 1.85
Total load = 1.65

Data set B is the same as set A except No2 is 0.50 pu

Offers (Gen's)

Block	Node	Power (per unit)	Price (c/kWh)	Q_{min}	Q_{max}
No1	North	0.75	2	-0.8	0.8
No2	North	0.70	4	-0.6	0.6
So1	South	0.40	3	-0.2	0.3

Centre for Energy and Environmental Markets

UNSW

Bid & offer data sets A & B

(ignoring network effects) (Pamudji, UNSW, 1995)

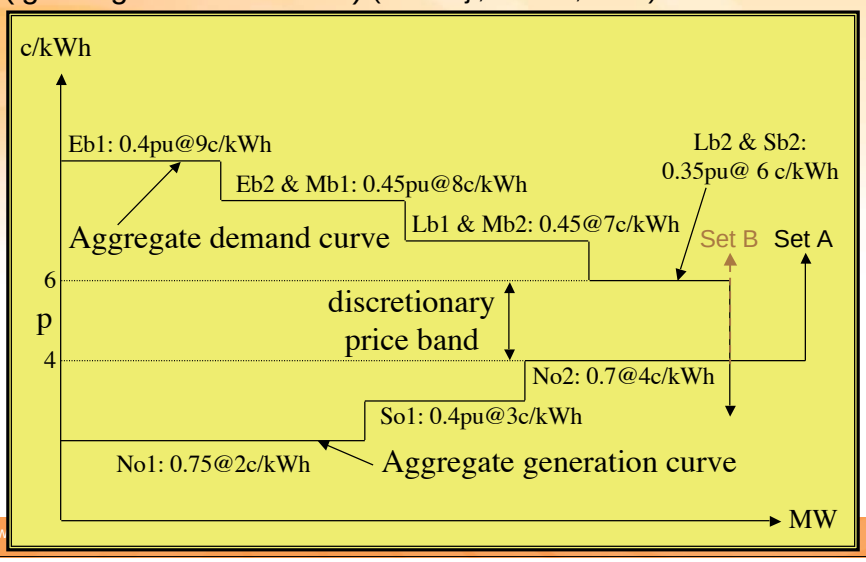

15

Centre for Energy and Environmental Markets

UNSW

Bid & offer price data for set A by node (c/kWh) (Pamudji, UNSW, 1995)

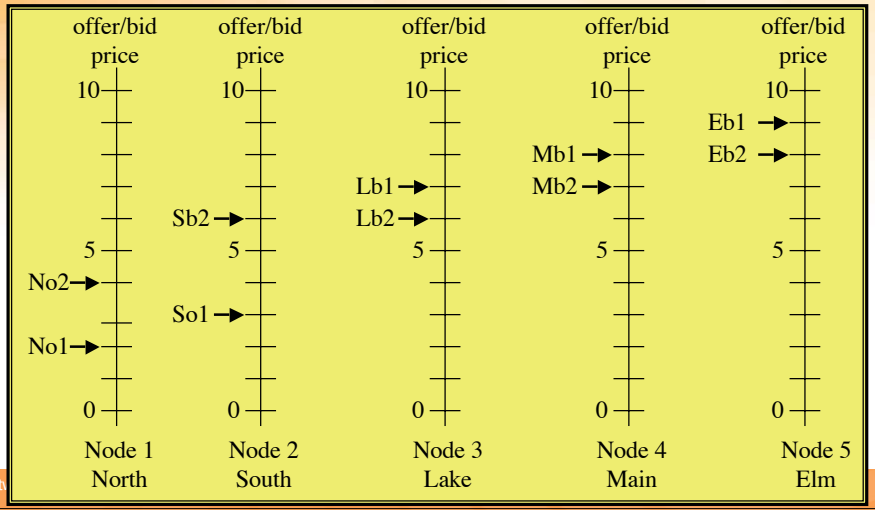

16

Centre for Energy and Environmental Markets

UNSW

AC loadflow model with voltage constraints

(Pamudji, UNSW, 1995)

- Assumptions for this study:
  - Reactive power offer prices are always zero
  - Loads are constant power factor & independent of voltage
  - Line capacitances are modelled, but not line shunt losses
  - Node voltages must lie in the range: 0.95≤V≤1.05
- Examples considered

1 Base case: unconstrained line flows, adequate generation
2 Constrained generating capacity, unconstrained network
3 Flow constraint on line 1 @ 0.8 pu (unconstrained 0.89pu)
4 Binding voltage constraint, V≥0.97 @ node 5 (load pf 0.9)
5 Increased network losses (line resistances +5%, +10%)
6 Effects of different load power factors

Network pricing for nodal pricing © CEEM 2007 17

Centre for Energy and Environmental Markets

UNSW

Base case result (data set A) (Pamudji, UNSW, 1995)

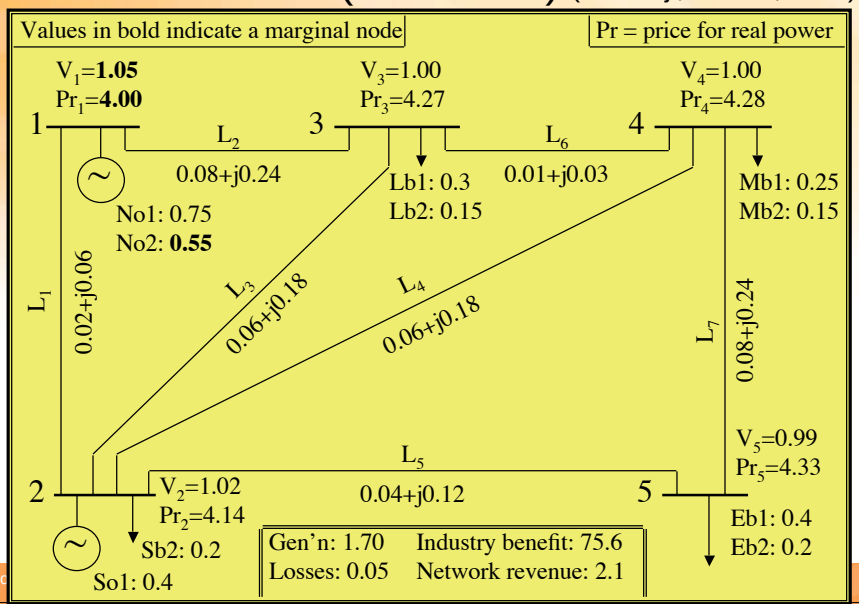

Netwo 18

Centre for Energy and Environmental Markets

UNSW

Constrained generation (data set B) (Pamudji, UNSW, 1995)

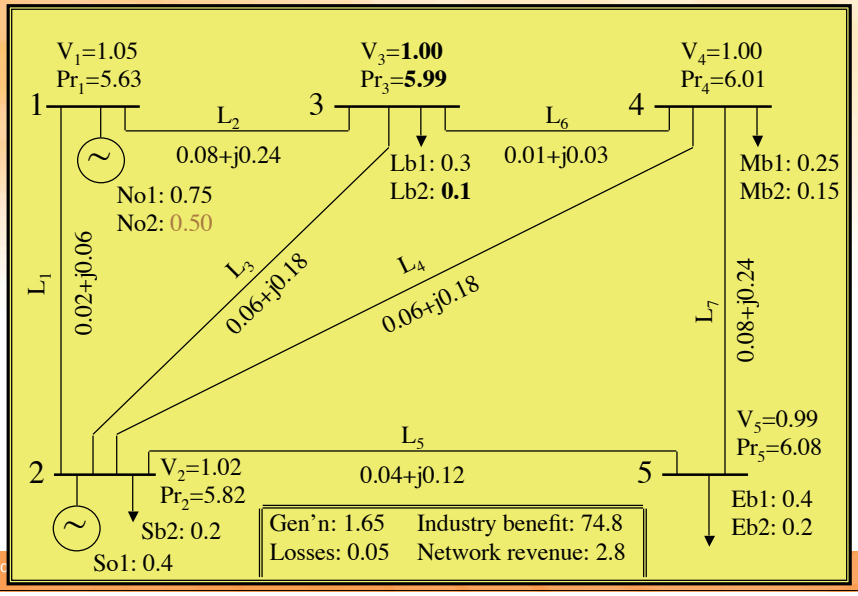

Netwo 19

Centre for Energy and Environmental Markets

UNSW

Line 1 constrained @ 0.8 pu (0.89 unconstrained) (Pamudji, 1995)

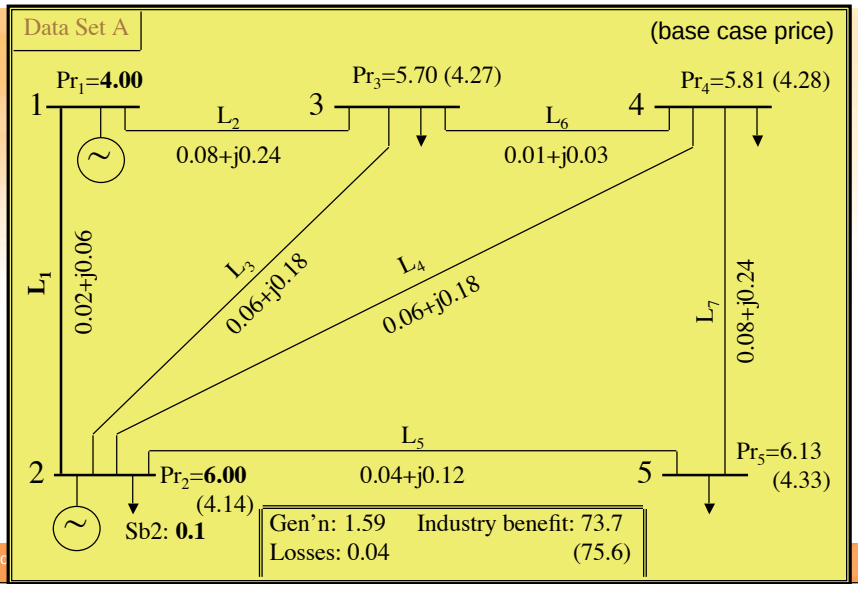

Netwo 20

Centre for Energy and Environmental Markets

UNSW

Voltage constraint (0.9 pf loads, V≥0.97 @ node 5) (Pamudji, 1995)

Nodal Active power price (c/kWh)

	unconstrained		V const'd
Case:	*Data A*	*Data B*	*V_5≥0.97*
North	**4.00**	5.53	**4.00**
South	4.14	5.72	4.66
Lake	4.28	**5.90**	**5.01**
Main	4.30	5.93	5.12
Elm	4.36	6.02	**5.96**

Voltage magnitude (per unit)

	unconstrained		V const'd
Case:	*Data A*	*Data B*	*V_5≥0.97*
North	**1.05**	1.05	**1.05**
South	1.00	1.01	1.01
Lake	0.97	**0.98**	**0.98**
Main	0.97	0.97	0.98
Elm	0.95	0.95	**0.97**

Nodal Reactive power price (c/kWh)

	unconstrained		V const'd
Case:	*Data A*	*Data B*	*V_5≥0.97*
North	**0.00**	0.00	**0.00**
South	0.10	0.13	1.55
Lake	0.16	**0.20**	**1.80**
Main	0.17	0.22	2.03
Elm	0.21	0.27	**4.22**

Value of consumption for bid Eb2
(Voltage constrained case)

	Active P	Reactive P
Consumption	0.0615	0.0298
Nodal Price	5.9568	4.2187
Value	0.3663	0.1257

(0.3663+ 0.1257)/ 0.0615 = **8.0**

Netwo 21

Effect of line resistance (% of base case) on active power prices (Pamudji, UNSW, 1995)

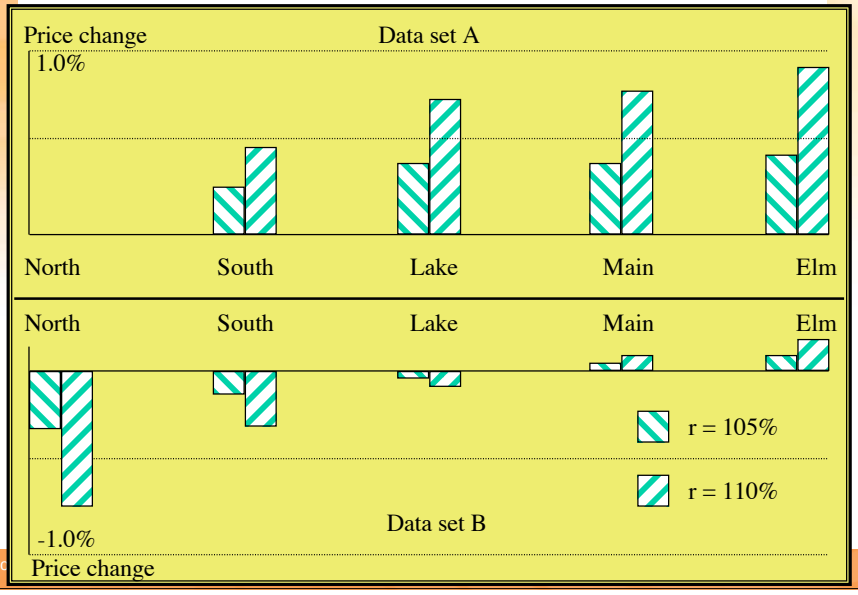

Netwo 22

Centre for Energy and Environmental Markets

UNSW

Summary of AC network results

- Either offers or bids can be marginal (data sets A or B)
- Line resistances cause nodal prices to differ even when network flow is not constrained
- More than one node can be marginal:
  - When network flow constraints or voltage limits restrict network arbitrage
- If reactive power is a free resource, voltages rise to reduce network series losses:
  - upper voltage constraint binds at a generator:
    - Network shunt losses not modelled

Centre for Energy and Environmental Markets

UNSW

Summary of AC results (continued)

- Reactive power price >0 if no (or constrained) source at node:
  - Due to network losses, network constraints
  - Effects spread though the network (voltage is a shared resource)
- End-user's cost includes reactive power:
  - If paying for reactive power, end-user not willing to pay as much for real power
  - Some supply side benefit goes to reactive power sources

Centre for Energy and Environmental Markets

UNSW

AC loadflow with voltage-value functions

(an alternative to specifying voltage constraints)

- Outside a preferred voltage range:
  - A generator wants greater compensation
  - An end-user won't pay as much
- bid (offer) price = [VVF]x[standard offer]
  - Where the voltage-value function (VVF) used for these studies was (Pamudji, UNSW, 1995):

$$VVF = \begin{cases} 1+\alpha(V_{min}-V)^3 & \text{if } V<V_{min} \\ 1 & \text{if } V_{min}<V<V_{max} \\ 1+\beta(V-V_{max})^3 & \text{if } V>V_{max} \end{cases}$$

Centre for Energy and Environmental Markets

UNSW

Effect of VVF's on bids & offers (Pamudji, UNSW, 1995)

Bid VVF
(an end-user won't pay as much outside a preferred voltage range)

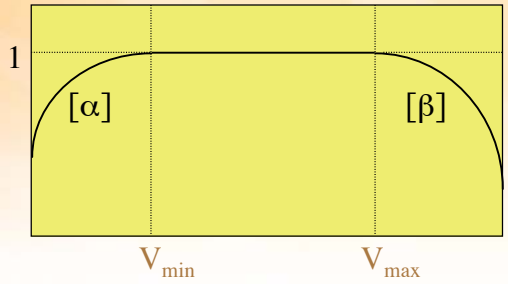

Offer VVF
(a generator wants greater compensation outside a preferred voltage range)

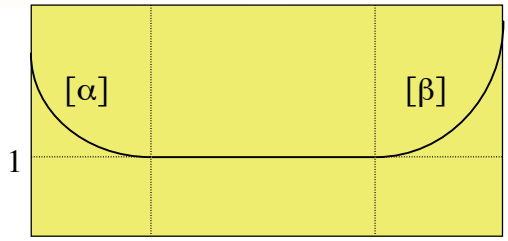

Centre for Energy and Environmental Markets

UNSW

Cases studies for 5-node network (Pamudji, UNSW, 1995)

- Base case ($\alpha = \beta = 50$ for bids, $\beta = 2000$ for offers)
  - Line resistances 105% of 'standard' network data
  - Increased loads: Eb1 = 0.8 pu (0.4), Eb2 = 0.27 pu (0.2)
  - Increased generation capacity, No1 = 1.35
  - Total generation = 2.45 pu, total load = 2.12
- Change cases for generator VVFs:
  - No1 & No2: $\beta = 20000$
    $\beta = 200$
  - No1 & No2: $V_{max} = 1.1$ (from 1.05)
    $V_{max} = 1.0$ (from 1.05)
  - So1: $V_{max} = 1.0$ (from 1.05)

Centre for Energy and Environmental Markets

UNSW

Case studies (continued) (Pamudji, UNSW, 1995)

- Change cases for end-user VVFs :
  - Eb1: $\alpha = 50000$, $V_{min} = 1.0$ (from 0.95)
  - With variations to test interaction between Eb1 & Eb2:
    - Eb1 bid price = 7, 8, **9** c/kWh (Eb2 bid price = 8)
- Simultaneous generator & end-user changes:
  - Eb1: $\alpha = 50000$, $V_{min} = 1.0$ with one of the following changes at a time:
    - No1 & No2: $\beta = 20000; 200$
    - So1: $V_{max} = 1.0$
  - Changes are generally in the direction of more strict voltage requirements

Results for base case & generator VVF changes (Pamudji, UNSW, 1995)

	Base case	β_{north} 20000	β_{north} 200	$V_{maxNorth}$ 1.00	$V_{maxNorth}$ 1.10	$V_{maxSouth}$ 1.00
Nodal active power prices (c/kWh)						**price**
North	**4.002**	**4.001**	**4.006**	**4.024**	**4.000**	**4.001**
South	4.262	4.265	4.257	4.478	4.202	4.242
Lake	4.406	4.411	4.396	4.659	4.337	4.392
Main	4.441	4.446	4.429	4.732	4.365	4.426
Elm	4.648	4.658	4.628	5.199	4.537	4.629
Industry results						
Gen, pu	2.228	2.229	2.225	2.241	2.217	2.229
Load, pu	2.120	2.120	2.120	2.120	2.120	2.120
Loss, pu	0.108	0.109	0.105	0.121	0.097	0.109
Ind S, k$	108.0	107.9	108.1	106.6	108.4	107.9
Nodal voltages (pu)						
North	**1.056**	**1.052**	**1.069**	**1.014**	**1.102**	**1.055**
South	1.010	1.006	1.025	0.964	1.060	1.008
Elm	0.951	0.946	0.966	0.900	1.005	0.948
Dispatch, pu (other bids & offers fully accepted)						
No2	**0.478**	**0.479**	**0.475**	**0.491**	**0.467**	**0.479**

North has a 'price-band' monopoly over price setting (e.g. result for $V_{maxNorth}$ = 1.00). However North is still rewarded for low β.

South is still fully dispatched for $V_{maxSouth}$ = 1.00 but paid less.

Loss low & surplus high when β low or V_{max} high.

29

Results for base case & end-user VVF changes (Pamudji, UNSW, 1995)

	Base case	Eb1 bid price (c/kWh) 9	8	7
Nodal active power prices (c/kWh)				**price**
North	**4.002**	**4.418**	**4.404**	**4.277**
South	4.262	5.786	5.748	5.306
Lake	4.406	5.991	5.952	5.490
Main	4.441	6.190	6.148	5.638
Elm	4.648	**8.000**	**7.923**	**6.941**
Industry results				
Gen, pu	2.228	2.138	2.138	2.078
Load, pu	2.120	2.048	2.048	1.994
Ind S, k$	108.0	100.8	93.0	86.0
Nodal voltages (pu)				
North	**1.056**	**1.087**	**1.087**	**1.083**
Elm	0.951	**0.995**	**0.994**	**0.995**
Dispatch, pu (other bids & offers fully accepted)				
No2	**0.478**	**0.388**	**0.388**	**0.328**
Eb1	0.800	0.800	**0.728**	**0.674**
Eb2	0.270	**0.198**	0.270	0.270

Data:
Eb1: α=50000, V_{min}=1.0
Eb2: bid price = 8 c/kWh
Two nodes are marginal

Eb1 bid price = 9:
Eb2 is curtailed to increase V, Elm price rises to Eb2 bid, industry surplus falls.

Eb1 bid price = 8:
Eb1 is curtailed to increase V, Elm price rises, industry surplus falls.

Eb1 bid price = 7:
Eb1 is curtailed to increase V, Elm price rises, industry surplus fall.

Network pricing for nodal pricing © CEEM 2007 30

Simultaneous generator & end-user changes
(Pamudji, UNSW, 1995)

β_{north} :	200	2000	20000	2000
$V_{maxSouth}$	1.05	1.05	1.05	1.00
Nodal active power prices (c/kWh)				**price**
North	**4.080**	**4.418**	**4.312**	**4.314**
South	4.477	5.786	5.841	5.408
Lake	4.619	5.991	**6.000**	5.755
Main	4.675	6.190	6.232	5.958
Elm	5.102	**8.000**	8.237	**8.000**
Industry results				
Gen, pu	2.218	2.138	1.780	2.101
Load, pu	2.120	2.048	1.721	2.015
Ind S, k$	107.4	100.8	93.6	98.5
Nodal voltages (pu)				
North	**1.096**	**1.087**	**1.066**	**1.084**
Elm	0.998	**0.995**	0.994	**0.994**
Dispatch, pu (other bids & offers fully accepted)				
No2	**0.468**	**0.388**	**0.030**	**0.351**
Lb2	0.150	0.150	**0.021**	0.150
Eb2	0.270	**0.198**	0.000	**0.165**

Data:
Eb1=9,: α=50000, V_{min}= 1.0

β_{north} = 200:
Voltages high, Eb2 fully accepted, prices low, surplus high.

β_{north} = 2000:
Eb2 is curtailed to increase V, prices high, surplus low.

β_{north} = 20000:
Eb2 is rejected & Lb2 curtailed, prices high, surplus low.

$V_{maxSouth}$ = 1.00
Eb2 is curtailed to maintain V, prices high, surplus low.

Centre for Energy and Environmental Markets

Results of VVF studies for an AC network
(Pamudji, 1995)

- Predictable influences on auction outcomes:
  - Not restricted to a particular node (shared network)
- Competing bids & offers correctly resolved between:
  - Generators & end-users
  - Participants at the same node
  - Participants at different nodes
  - Participants & network

Centre for Energy and Environmental Markets

UNSW

Results of VVF studies (continued)

(Pamudji, UNSW, 1995)

- Appropriate incentives and rewards:
  - Except for 'price band' local monopoly of marginal bid/offer:
    - No pressure to reveal preferences
- Similar results for a 53 node, 73 line model of NSW:
  - VVF requests appropriately resolved, widespread effects

Centre for Energy and Environmental Markets

UNSW

Conclusions #1

- A transport model sometimes adequate:
  - Used in NEM with 'notional interconnectors':
    - As yet no 'loop flow' effects between market regions
    - Voltage control treated as an ancillary service
  - Acceptable for an initial implementation
- DC loadflow models 'loop flow':
  - However network flow limits difficult to incorporate as voltage effects still ignored:
    - PJM market uses DC loadflow for real power flows but AC loadflow for reactive power flows

Centre for Energy and Environmental Markets

UNSW

Conclusions #2

- AC loadflow accurately models network:
  - Both voltage and current constraints
  - Series & shunt impedances of network elements
  - However constraints have commercial value:
    - VVFs preferable to nodal voltage constraints:
      - Permits valuation of voltage-related ancillary services
- AC network model essential for accurate implementation of a nodal spot market:
  - However complex bids & offers then required:
    - Demand-side bids as well as supply-side offers
    - AMI to measure interval energy plus availability & quality of supply

Network pricing for nodal pricing © CEEM 2007 35

Centre for Energy and Environmental Markets

UNSW

Conclusions #3

- Accurate network models can be incorporated in nodal spot markets:
  - Commercial model then closer to physical reality
- However problems remain:
  - Network models must be more accurate
  - Bid/offer structure becomes more complex:
    - Risk management also becomes more complex
  - Network constraints will always exacerbate local market power (& constraint settings matter):
    - AMI & active end-user participation become essential
- Further study needed to assess cost/benefits

Network pricing for nodal pricing © CEEM 2007 36

Centre for Energy and Environmental Markets

UNSW

Limits to the effectiveness of nodal markets

- For a given network, more nodal markets:
  - Mean fewer participants in each nodal market:
    - Local participants & network owners gain market power
    - Ancillary services, spot energy & risk harder to price
  - Require a more accurate network model
  - *There is a lower limit to the level of network detail that nodal markets can resolve*
- Regional markets provide one option:
  - Place major flow constraints on region boundaries:
    - Models of "notional interconnectors" then required
  - Resolve intra-regional network flow constraints by negotiation under regulatory supervision

Network pricing for nodal pricing © CEEM 2007 37

Centre for Energy and Environmental Markets

UNSW

Many of our publications are available at:
www.ceem.unsw.edu.au

www.ceem.unsw.edu.au